CFLJ

(Application):

:

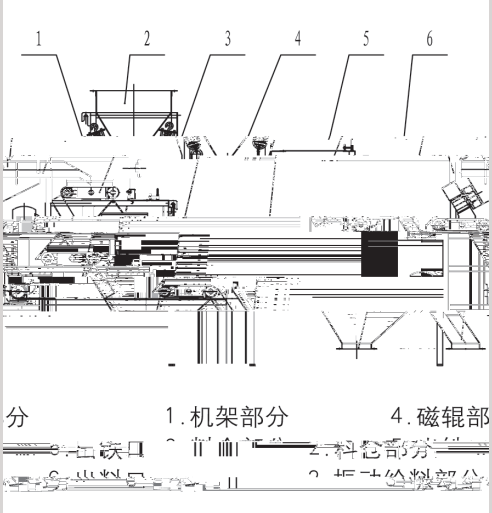

(Technical Parameter):